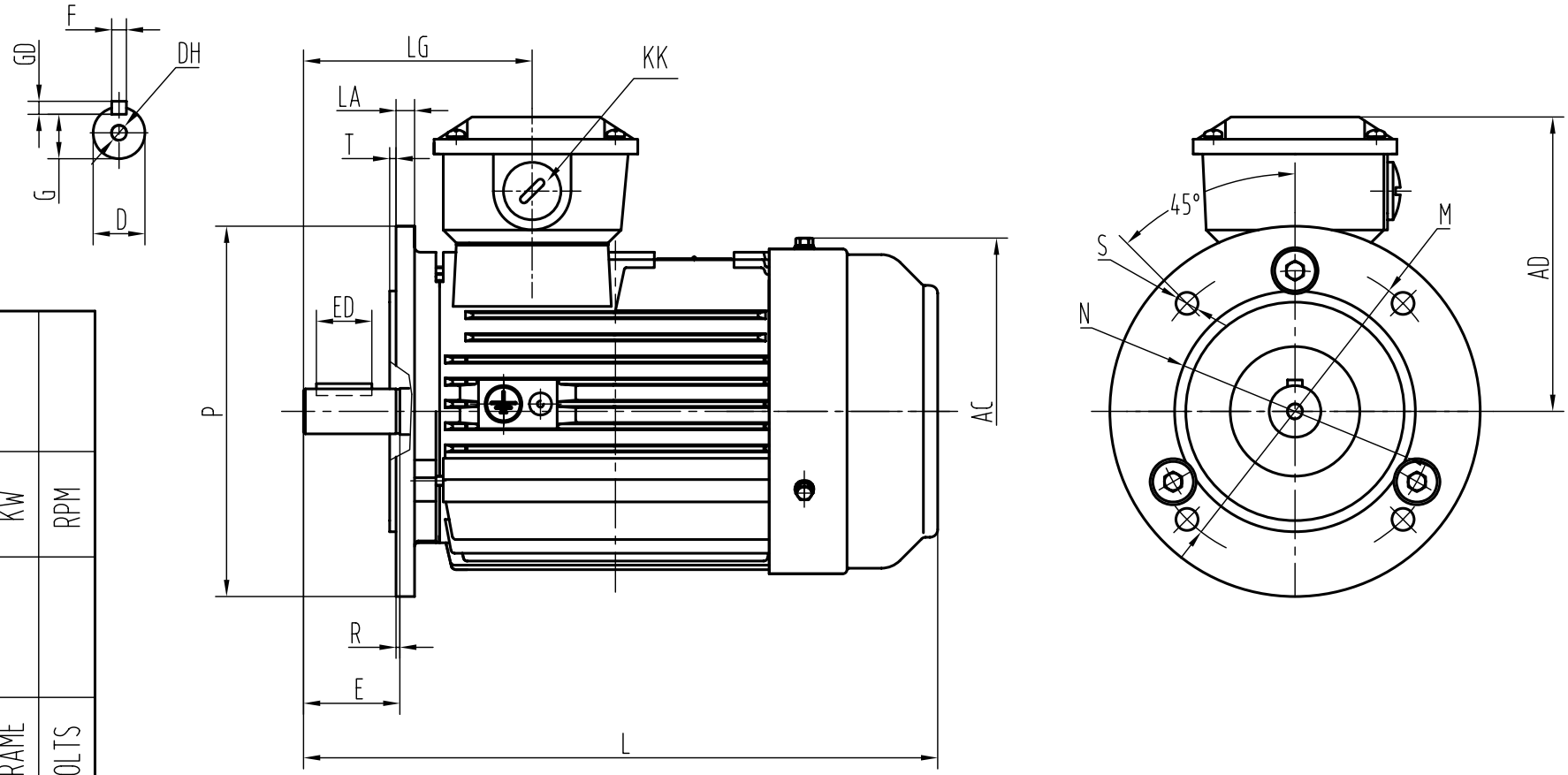

CLIENT:		
	KW	RPM
	FRAME	VOLTS

OUTLINE DIMENSIONS FLANGE MOUNTED MOTORS																	SHAFT EXT.DE ONLY							WEIGHT
AC	AD				KK	L		LG	LA	M	N	P	R	S	T			D	DH	E	ED	F	G	GD	
195	165				M25X1.5	360(90S)	390(90L)	132	12	165	130	200	0	12	3.5			24	M8X19	50	40	8	20	7	

YX3-90 2-8P (B5) DIMENSION OUTLINE	DATE		2005.12.5	CHK	
	DRAWN		Huang	APPD	
	ISSUE A	DATE		CERTIFIED BY	
	ISSUE B	DATE		CERTIFIED BY	
	ISSUE C	DATE		CERTIFIED BY	
	ISSUE D	DATE		CERTIFIED BY	