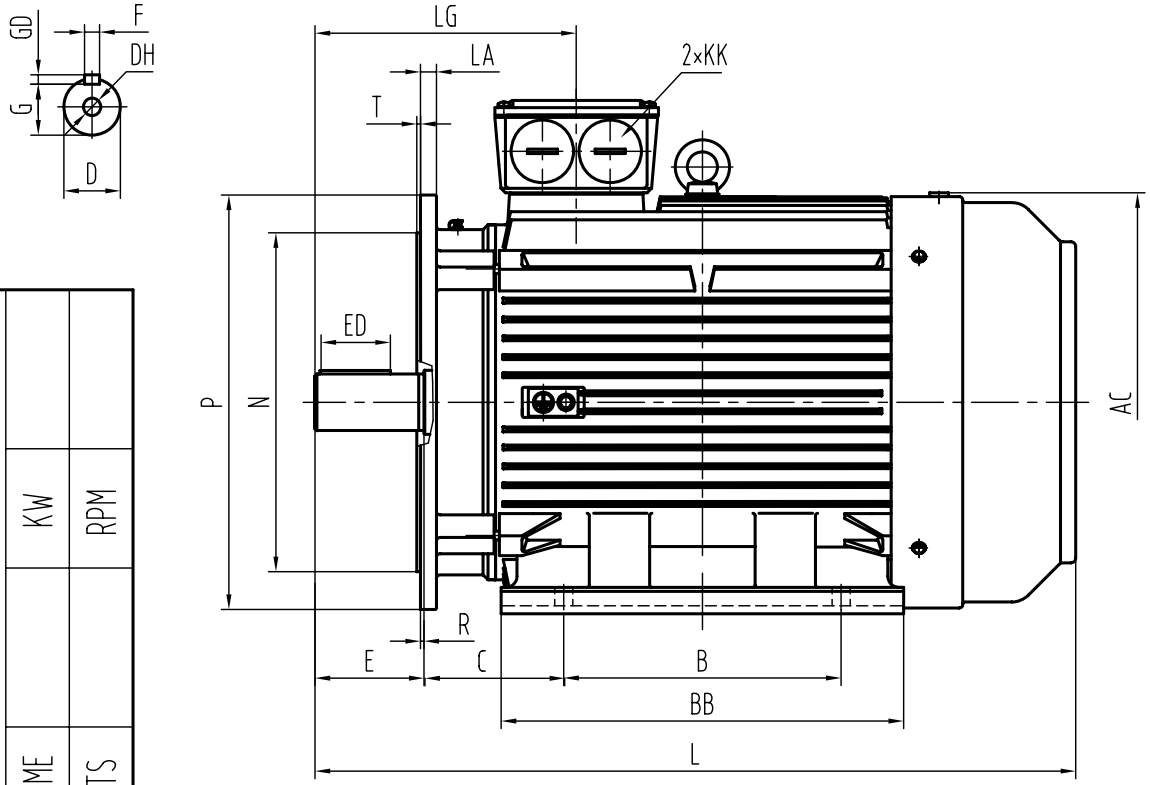

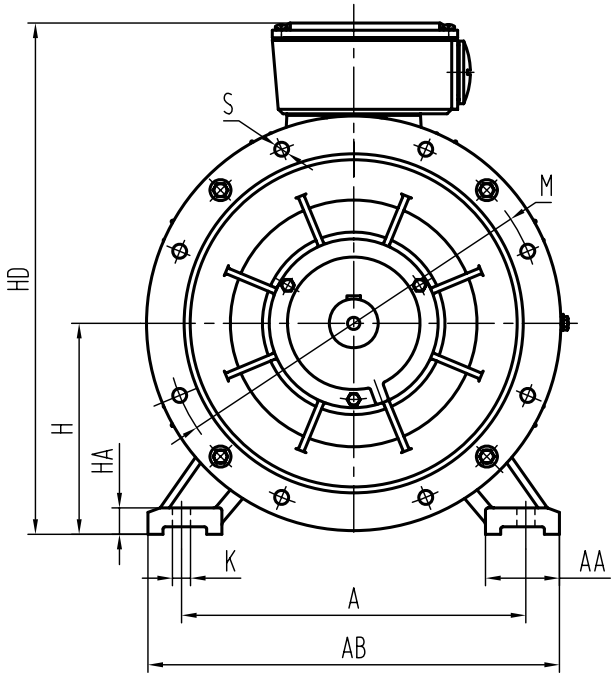

CLIENT:	KW	RPM
	FRAME	VOLTS

OUTLINE DIMENSIONS FOOT-FLANGE MOUNTED MOTORS

A	AA	AB	AC			B		BB		C	H	HA	HD	K	KK	L		LG
457	103	550	570			368(280S)	419(280M)	495(280S)	535(280M)	190	280	35	685	24	M63X1.5	975(280S)	1015(280M)	350

SHAFT EXT.DE ONLY

D	DH	E	ED	F	G	GD		
75	M20×42	140	110	20	67.5	12		

LA	R	M	N	P	S	T
22	0	500	450	550	18.5	5

CUSTOMER APPROVAL _____ SIGNATURE _____ DATE

YX3-280-4-8(B35)
DIMENSION OUTLINE

DATE			2005.12.5	CHK	
DRAWN			Liang	APPD	
ISSUE	A	DATE		CERTIFIED BY	
ISSUE	B	DATE		CERTIFIED BY	
ISSUE	C	DATE		CERTIFIED BY	
ISSUE	D	DATE		CERTIFIED BY	