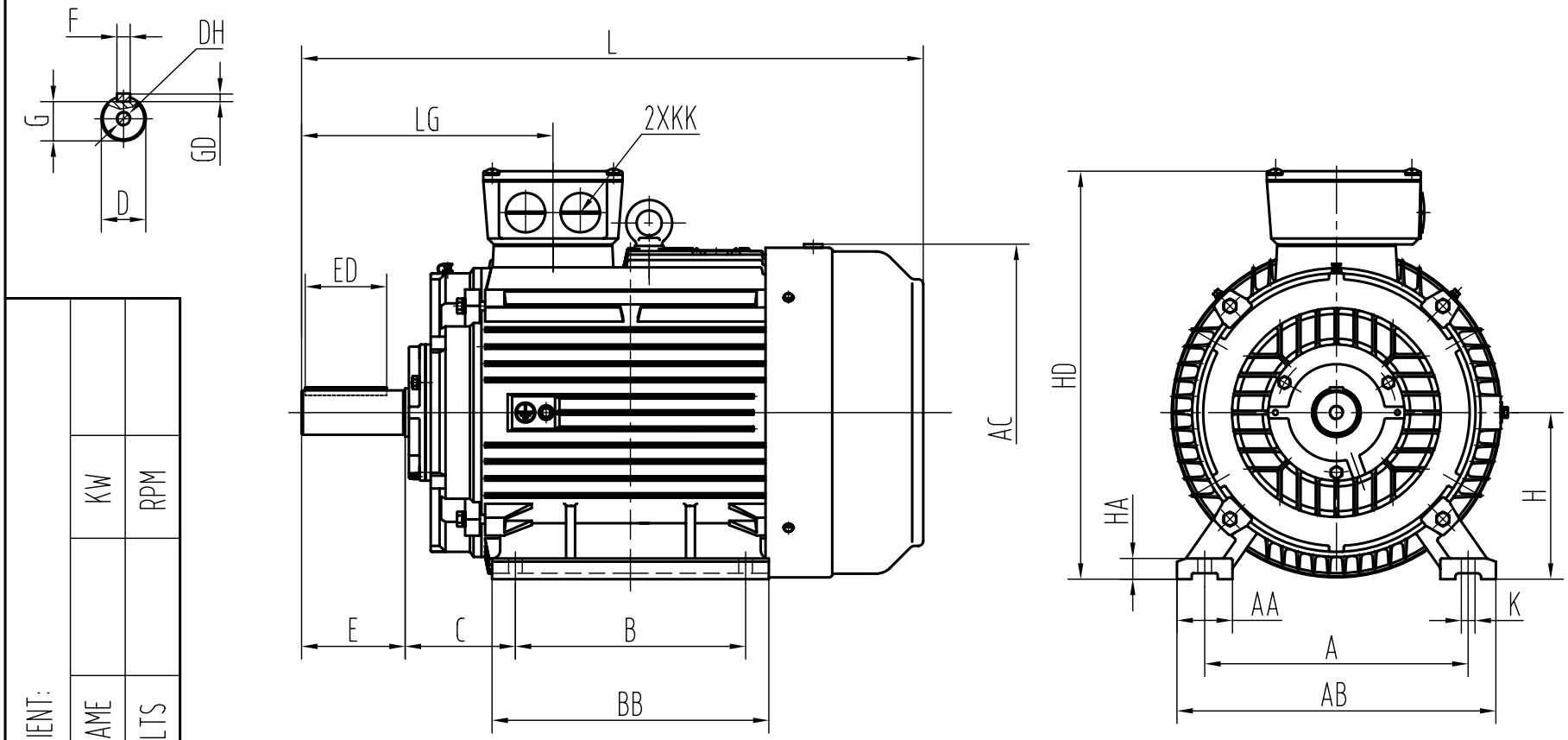

CLIENT:		
	KW	RPM
	FRAME	VOLTS

OUTLINE DIMENSIONS FOOT MOUNTED MOTORS

SHAFT EXT.DE ONLY

A	AA	AB	AC			B		BB		C	H		HA	HD	K	KK	L		LG	D	DH	E	ED	F	G	GD
356	75	436	465			286(225S)	311(225M)	355(225S)	380(225M)	149	225		28	560	18.5	M50X1.5	825(225S)	850(225M)	340	60	M20X42	140	110	18	53	11

CUSTOMER APPROVAL _____ SIGNATURE _____ DATE

YX3-225 4-8P (B3)
DIMENSION OUTLINE

DATE			2005.12.5	CHK	
DRAWN			Mao	APPD	
ISSUE	A	DATE		CERTIFIED BY	
ISSUE	B	DATE		CERTIFIED BY	
ISSUE	C	DATE		CERTIFIED BY	
ISSUE	D	DATE		CERTIFIED BY	