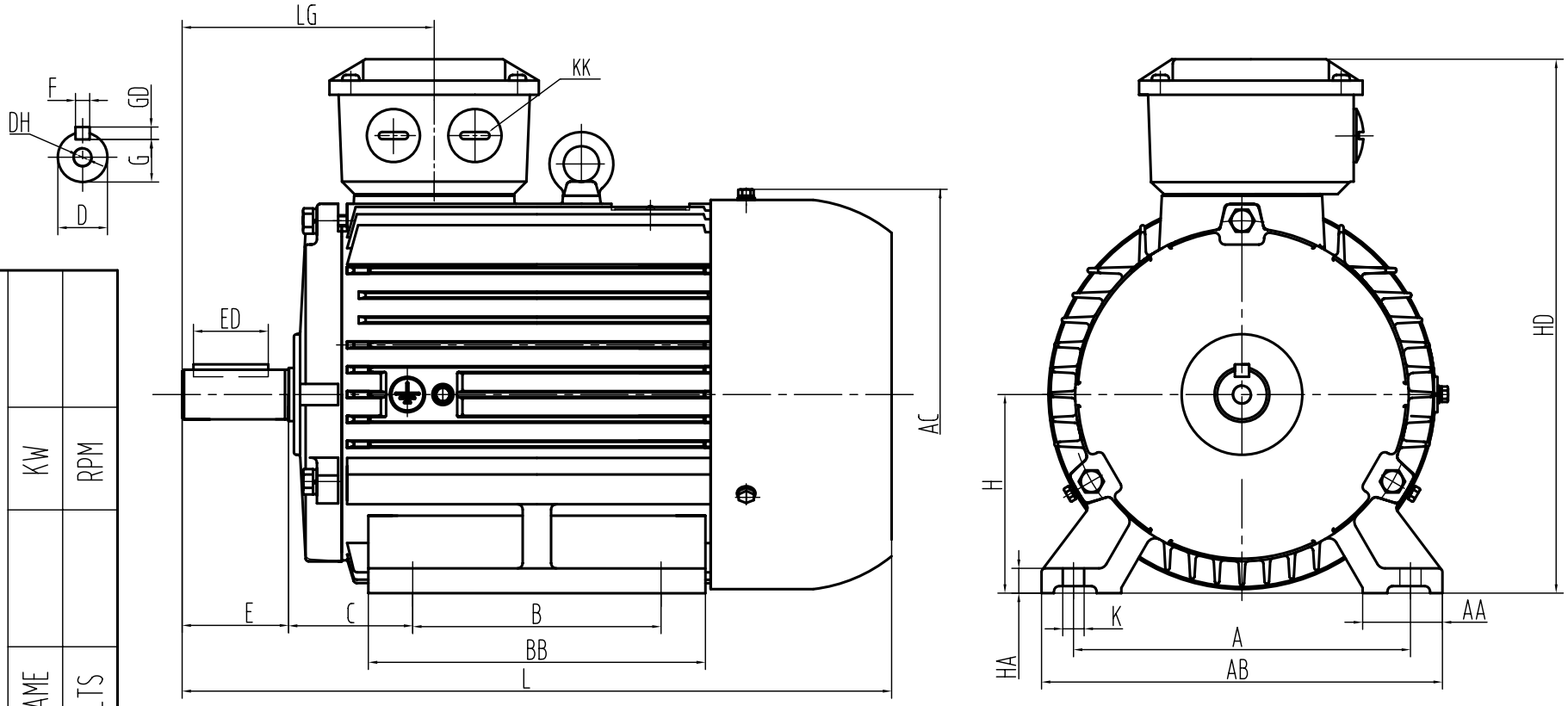

CLIENT:		
	KW	RPM
	FRAME	VOLTS

OUTLINE DIMENSIONS FOOT MOUNTED MOTORS																		SHAFT EXT.DE ONLY							WEIGHT
A	AA	AB	AC			B	BB	C	H		HA	HD	K	KK	L	LG		D	DH	E	ED	F	G	GD	
160	40	200	215			140	235	63	100		14	275	12	M25X1.5	435	153		28	M10X22	60	45	8	24	7	

CUSTOMER APPROVAL _____ SIGNATURE _____ DATE

YX3-100 2-8P (B3) DIMENSION OUTLINE	DATE	2005.12.6	CHK	
	DRAWN	Liu	APPD	
	ISSUE A	DATE	CERTIFIED BY	
	ISSUE B	DATE	CERTIFIED BY	
	ISSUE C	DATE	CERTIFIED BY	
	ISSUE D	DATE	CERTIFIED BY	