DRG.NO EF280S-8-B35

FRAME EF280S-8

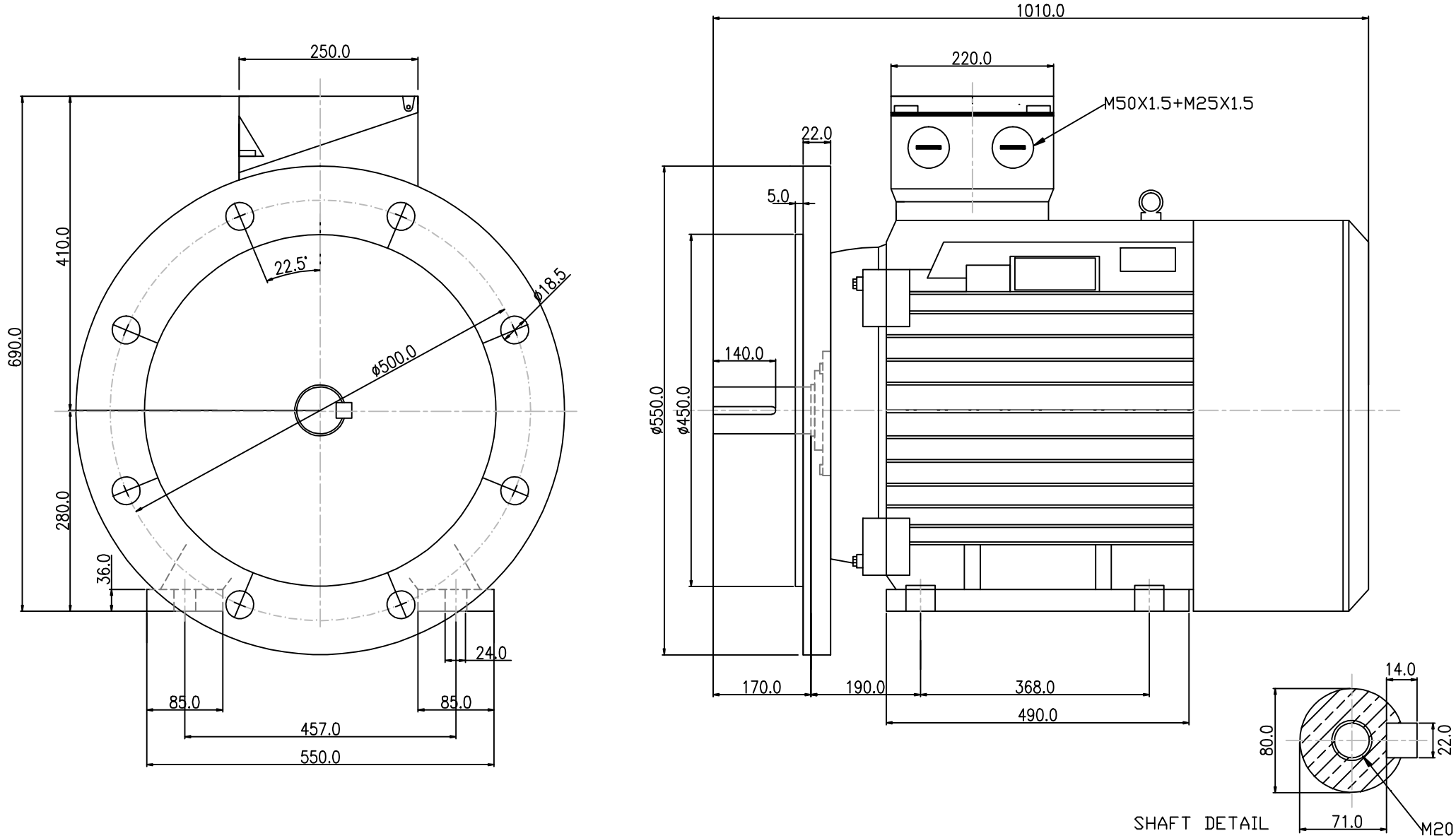

ROYCE CROSS AUSTRALIA

3 CORD STREET
DUDLEY PARK SA 5008
Ph: (08) 8269 4000
Fax: (08) 8269 4000
www.roycecross.com.au

PROJECTION	DRAFTING STANDARD AS 1100	SIZE A4

ALL DIMENSIONS ARE IN mm
UNLESS OTHERWISE SPECIFIED
TOL. 1 PLACE DECIMAL ± 0.25 ANGLE ± 0.30°
2 PLACE DECIMAL ± 0.13

MATL | SPEC

TITLE
THREE PHASE INDUCTION MOTORS-TOP TERMINAL BOX
(FLANGE MOUNT B35 EF280S-8)

DRN	NL	DATE	19.12.08
CHK		APPD	
SCALE	NTS		

DESCRIPTIONS
SHAFT TYPE EF280-8

BRAND AXM

DRG NO EF280S-8-B35 REV

CODE No.