DRG.NO	D112MCG	FRAME	D112M

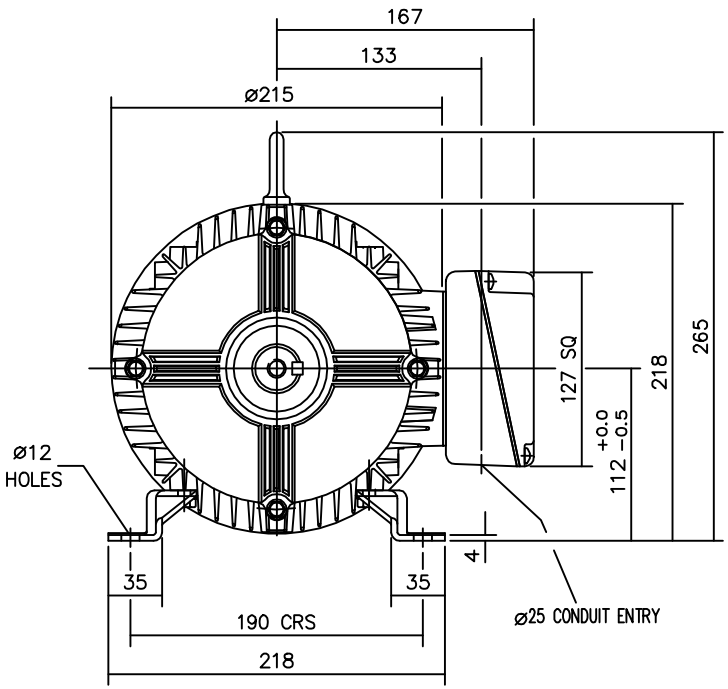

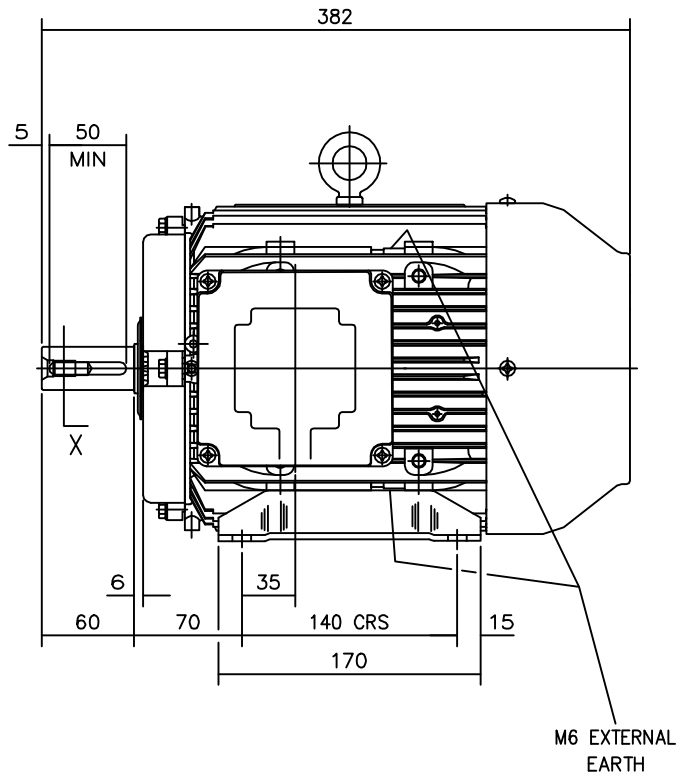

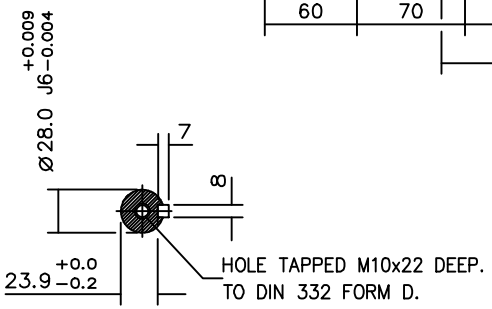

VIEW ON 'X'

TERMINAL BOX POSITION:- CAN BE ARRANGED AT EITHER 9,12 OR 3 O'CLOCK BY MOVING STANDARD TERMINAL BOX POSITION IS 3 O'CLOCK AS SHOWN.
CONDUIT ENTRIES:- TERMINAL BOX CAN BE ROTATED AT 90° INTERVALS (CONDUIT ENTRY POSITION SHOWN FOR ILLUSTRATION ONLY).

ROYCE CROSS AUSTRALIA
3 CORD STREET
DUDLEY PARK SA 5008
Ph: (08) 8269 4000
Fax: (08) 8269 4000
www.roycecross.com.au

PROJECTION	DRAFTING STANDARD AS 1100	SIZE A3

ALL DIMENSIONS ARE IN mm
UNLESS OTHERWISE SPECIFIED
TOL. 1 PLACE DECIMAL ± 0.25 ANGLE ± 0.30°
2 PLACE DECIMAL ± 0.13

MATL		SPEC	

TITLE	OUTLINE DIMENSION DRAWING W ALUMINIUM TOTALLY ENCLOSED FAN COOLED 112M FRAME FOOT MOUNTED MOTOR		
DRN	NL	DATE	06.03.09
CHK		APPD	
SCALE	NTS		

USED ON	D112M	
KW		HP
PART NO		AMPS
TYPE		
CAP RUN		CAP START

BRAND	Crompton Greaves	
DRG NO	D112MCG	REV
CODE No.		