DRG.NO	D100LCG	FRAME	D100L

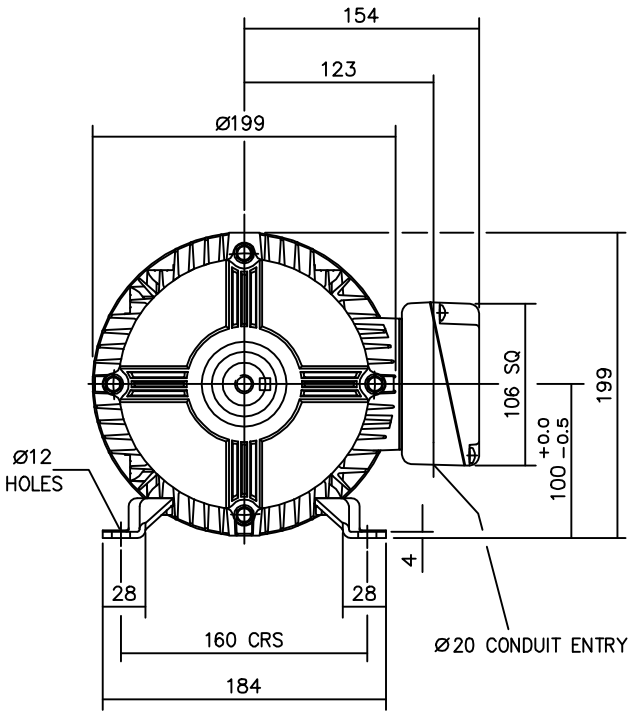

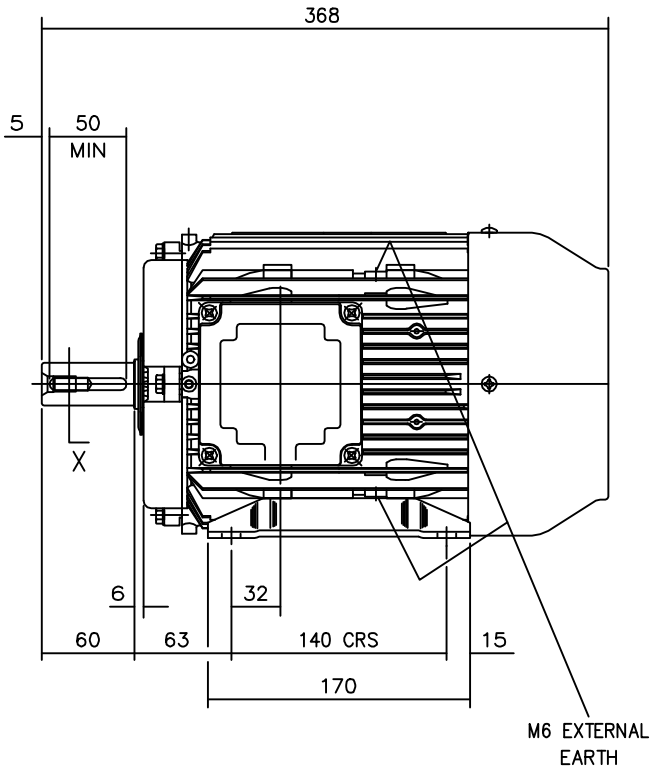

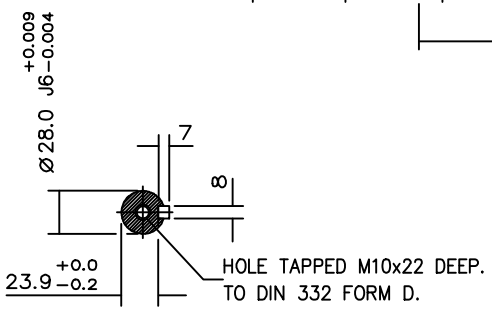

VIEW ON 'X'

TERMINAL BOX POSITION:- CAN BE ARRANGED AT EITHER 9,12 OR 3 O'CLOCK BY MOVING
STANDARD TERMINAL BOX POSITION IS 3 O'CLOCK AS SHOWN.
CONDUIT ENTRIES:- TERMINAL BOX CAN BE ROTATED AT 90° INTERVALS
(CONDUIT ENTRY POSITION SHOWN FOR ILLUSTRATION ONLY).

ROYCE CROSS AUSTRALIA
3 CORD STREET
DUDLEY PARK SA 5008
Ph: (08) 8269 4000
Fax: (08) 8269 4000
www.roycecross.com.au

PROJECTION	DRAFTING STANDARD AS 1100	SIZE A3

ALL DIMENSIONS ARE IN mm
UNLESS OTHERWISE SPECIFIED
TOL. 1 PLACE DECIMAL ± 0.25 ANGLE ± 0.30°
2 PLACE DECIMAL ± 0.13

MATL		SPEC	

TITLE: OUTLINE DIMENSION DRAWING W ALUMINIUM TOTALLY ENCLOSED FAN COOLED 100L FRAME FOOT MOUNTED MOTOR

DRN	NL	DATE	06.03.09
CHK		APPD	
SCALE	NTS		

USED ON	D100L	
KW		HP
PART NO		AMPS
TYPE		
CAP RUN		CAP START

BRAND: Crompton Greaves

DRG NO: D100LCG REV

CODE No.