FORMAT FD : 07-Q R4

DRG.NO	MATERIAL	SPECIFICATION	PROJECTION	GENERAL TOLERANCE ON DIMENSIONS	MACHINED SURFACES SHOWN BY	CONTROL CHARACTERSTICS	IF IN DOUBT, ASK
SGQ1720	—	—		1 PLACE DECIMAL ± 0.25 ANGLE ±0.30 2 PLACE DECIMAL ± 0.13	▽ ROUGH FINISH ▽▽▽ GROUND FINISH ▽▽ SMOOTH FINISH	⬠ MANDATORY MEASUREMENT ◇ FIT/FUNCTION SPC Ⓐ SAFETY CHARACTERISTIC	ALL DIMENSIONS ARE IN mm UNLESS OTHERWISE SPECIFIED

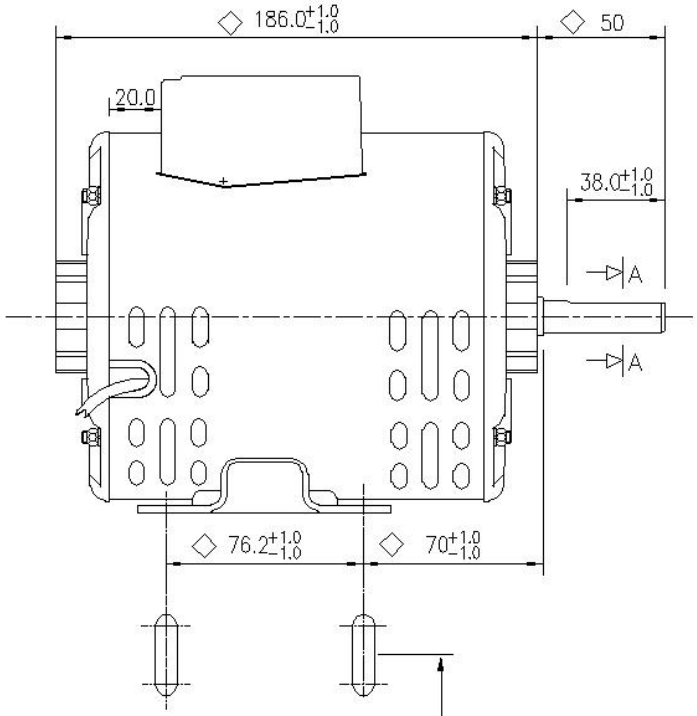

MOUNTING DIMENSIONS

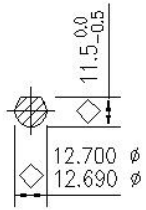

SECTION AA

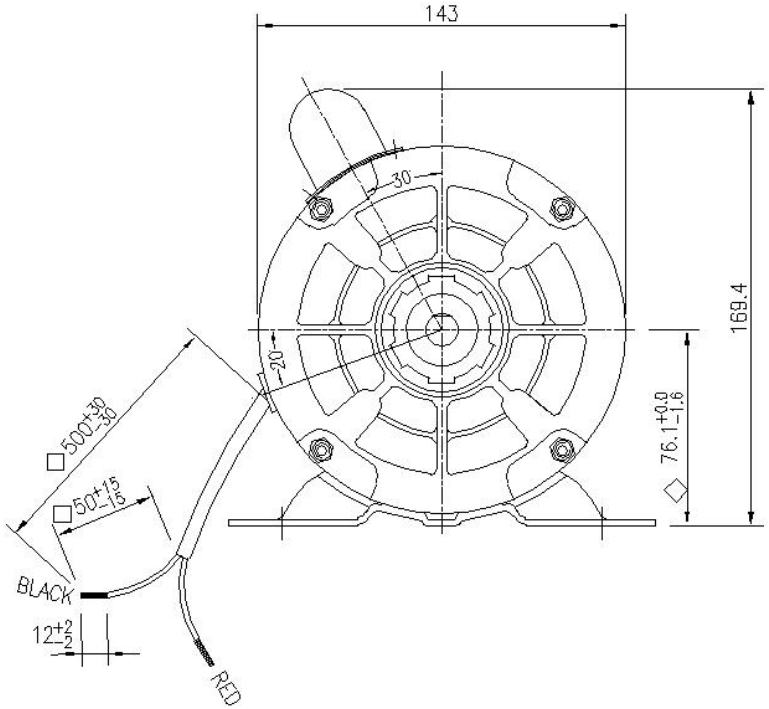

R	DATE		R	DATE		R	DATE		R	DATE		R	DATE		R	DATE	
DRN	CHD	APPD	DRN	CHD	APPD	DRN	CHD	APPD	DRN	CHD	APPD	DRN	CHD	APPD	DRN	CHD	APPD
DICN No.			DICN No.			DICN No.			DICN No.			DICN No.			DICN No.		

DRN	A.G.N	29.01.08
CHK		
APPD		
SCALE		
DATA STORAGE	1 : 1	
DICN No.		

USED ON: B48 FRAME

R.C.A 0.25HP

Crompton Greaves

DRG NO: SGQ1720 REV: 0

CODE No.

QA | PROD | MARKET

ISSUED TO :

CONTROL PLAN #

The information contained in this document is confidential and should not be used without prior consent of CROMPTON GREAVES LTD.

JULY '97