DRG.NO	T.75F2CG	FRAME	B56

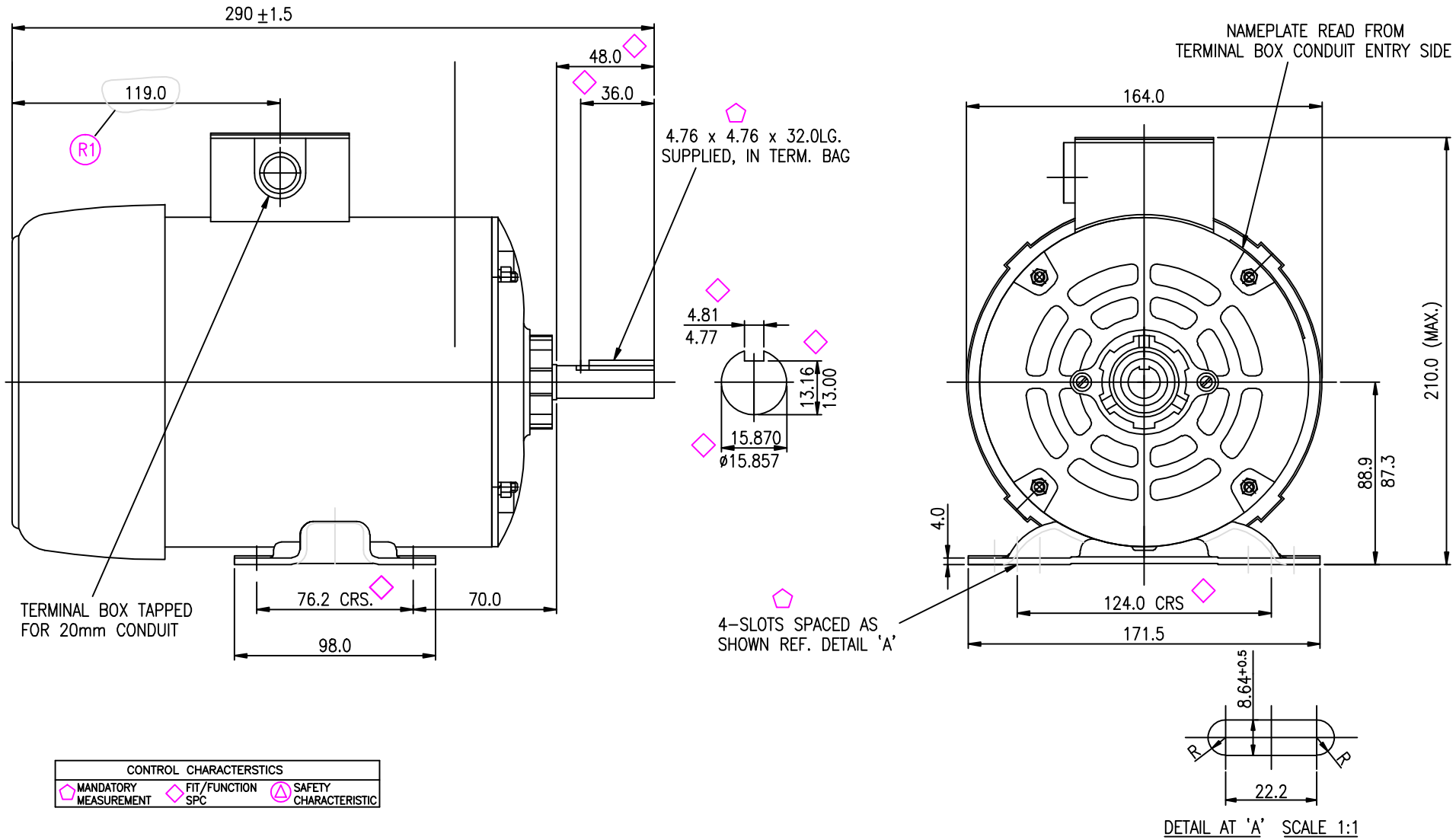

CONTROL CHARACTERSTICS		
MANDATORY MEASUREMENT	FIT/FUNCTION SPC	SAFETY CHARACTERISTIC

ROYCE CROSS AUSTRALIA
3 CORD STREET
DUDLEY PARK SA 5008
Ph: (08) 8269 4000
Fax: (08) 8269 4000
www.roycecross.com.au

PROJECTION	DRAFTING STANDARD AS 1100	SIZE A4

ALL DIMENSIONS ARE IN mm
UNLESS OTHERWISE SPECIFIED
TOL. 1 PLACE DECIMAL ± 0.25 ANGLE ± 0.30°
2 PLACE DECIMAL ± 0.13

MATL		SPEC	

TITLE
THREE PHASE TOTALLY ENCLOSED – 2800RPM
(B56 290ML)

DRN	NL	DATE	2.12.08
CHK		APPD	
SCALE	NTS		

USED ON	FRAME 56 WITH STD. FOOT		
KW	0.75	HP	1.0
PART NO	T.75F2CG	AMPS	2.2
TYPE	TEFC THREE PHASE		
CAP RUN	–	CAP START	–

BRAND: Crompton Greaves

DRG NO: T.75F2CG

REV

CODE No.