DRG.NO	T.55F6CG	FRAME	B56

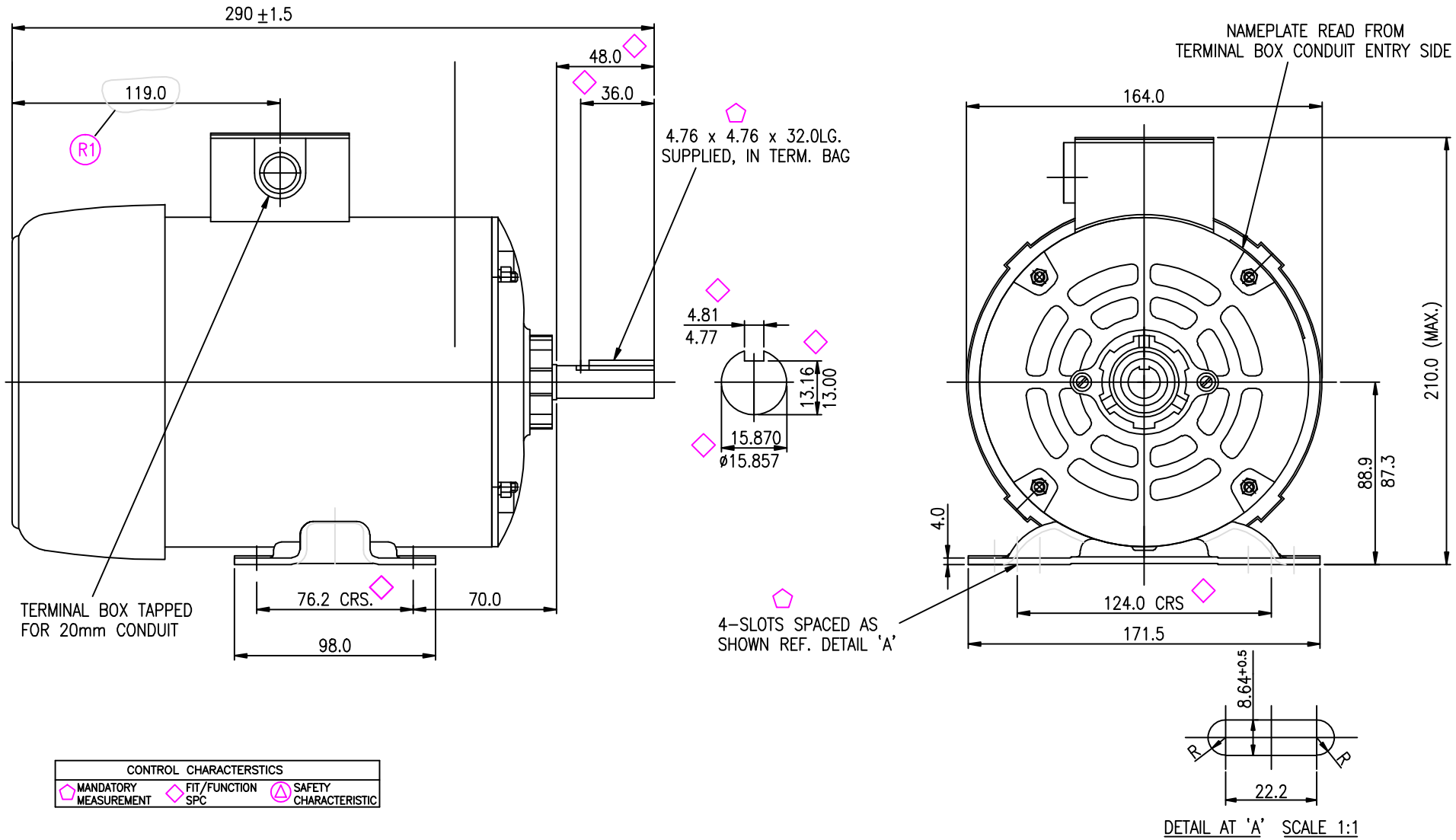

CONTROL CHARACTERSTICS		
MANDATORY MEASUREMENT	FIT/FUNCTION SPC	SAFETY CHARACTERISTIC

ROYCE CROSS AUSTRALIA
3 CORD STREET
DUDLEY PARK SA 5008
Ph: (08) 8269 4000
Fax: (08) 8269 4000
www.roycecross.com.au

PROJECTION	DRAFTING STANDARD AS 1100	SIZE A4

ALL DIMENSIONS ARE IN mm
UNLESS OTHERWISE SPECIFIED
TOL. 1 PLACE DECIMAL ± 0.25 ANGLE ± 0.30°
2 PLACE DECIMAL ± 0.13

MATL		SPEC	

TITLE
THREE PHASE TOTALLY ENCLOSED – 900RPM
(B56 290ML)

DRN	NL	DATE	2.12.08
CHK		APPD	
SCALE	NTS		

USED ON	FRAME 56 WITH STD. FOOT		
KW	0.55	HP	3/4
PART NO	T.55F6CG	AMPS	2.2
TYPE	TEFC THREE PHASE		
CAP RUN	–	CAP START	–

BRAND: Crompton Greaves
DRG NO: T.55F6CG
REV
CODE No.